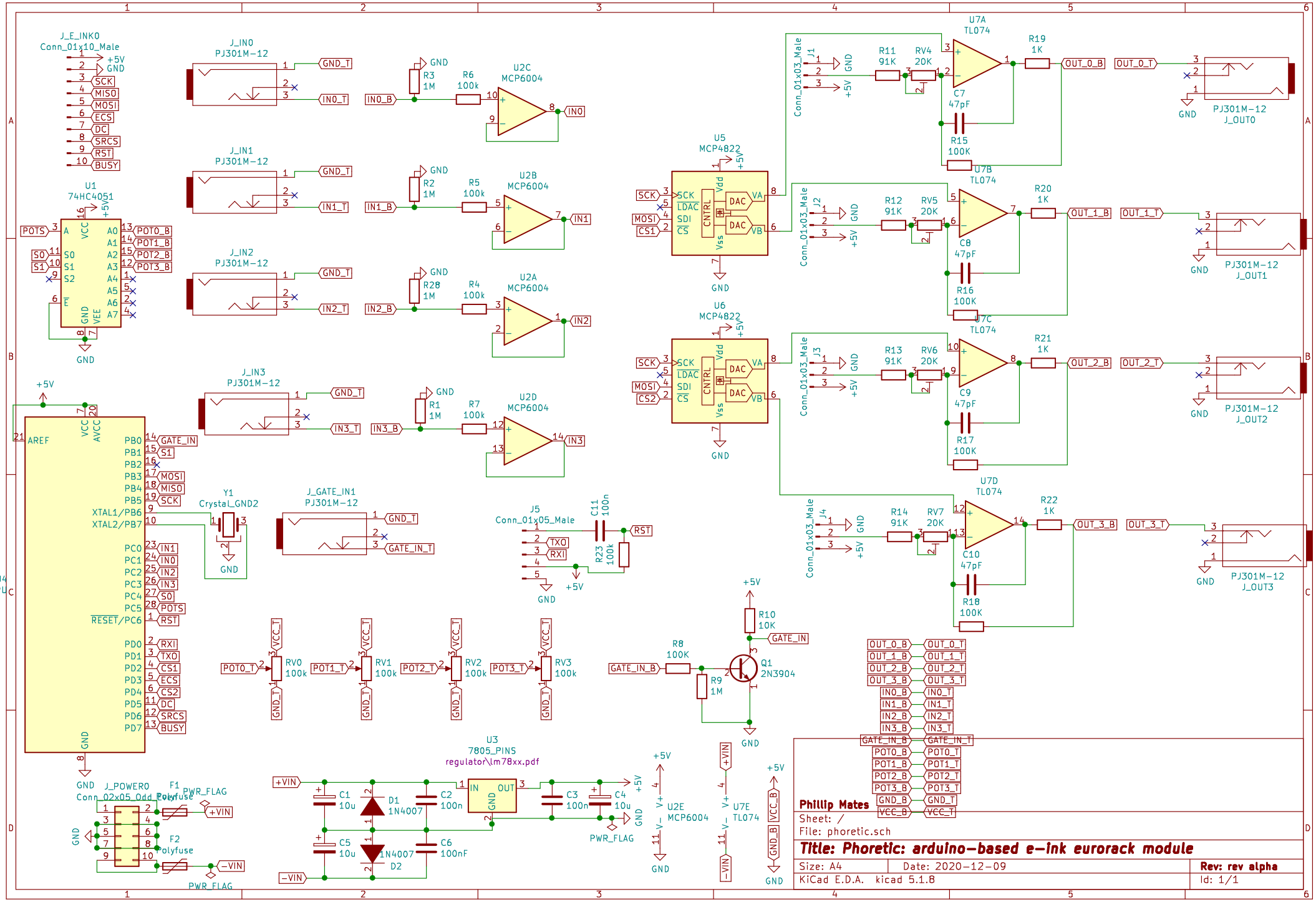
J_E_INK0
Conn_01x10_Male
+5V
GND
SCK
MISO
MOSI
ECS
DC
SRCS
RST
BUSY
U1
74HC4051
POTS
S0
S1
POT0_B
POT1_B
POT2_B
POT3_B
J_IN0
PJ301M-12
GND_T
IN0_T
IN0_B
R3
1M
R6
100k
U2C
MCP6004
IN0
J_IN1
IN1_T
IN1_B
R2
1M
R5
100k
U2B
IN1
J_IN2
IN2_T
IN2_B
R28
1M
R4
100k
U2A
IN2
J_IN3
IN3_T
IN3_B
R1
1M
R7
100k
U2D
IN3
U5
MCP4822
SCK
LDAC
SDI
CS
MOSI
CS1
CNTRL
Vdd
Vss
DAC
VA
VB
U6
CS2
U7A
TL074
U7B
U7C
U7D
Conn_01x03_Male
J1
J2
J3
J4
R11
91K
RV4
20K
R12
RV5
R13
RV6
R14
RV7
R19
1K
R20
R21
R22
C7
47pF
C8
C9
C10
R15
100K
R16
R17
R18
OUT_0_B
OUT_0_T
OUT_1_B
OUT_1_T
OUT_2_B
OUT_2_T
OUT_3_B
OUT_3_T
PJ301M-12
J_OUT0
J_OUT1
J_OUT2
J_OUT3
U4
a328P-PU
AREF
VCC
AVCC
PB0
PB1
PB2
PB3
PB4
PB5
XTAL1/PB6
XTAL2/PB7
PC0
PC1
PC2
PC3
PC4
PC5
RESET/PC6
PD0
PD1
PD2
PD3
PD4
PD5
PD6
PD7
GATE_IN
MOSI
MISO
SCK
IN1
IN0
IN2
IN3
S0
POTS
RST
RXI
TXO
CS1
ECS
CS2
DC
SRCS
BUSY
Y1
Crystal_GND2
J_GATE_IN1
GATE_IN_T
J5
Conn_01x05_Male
C11
100n
R23
100k
RST
TXO
RXI
RV0
RV1
RV2
RV3
POT0_T
POT1_T
POT2_T
POT3_T
VCC_T
R10
10K
R8
100K
R9
1M
GATE_IN_B
Q1
2N3904
U3
7805_PINS
regulator\lm78xx.pdf
IN
OUT
C1
10u
D1
1N4007
C2
100n
C3
100n
C4
10u
C5
10u
D2
C6
100nF
+VIN
-VIN
PWR_FLAG
J_POWER0
Conn_02x05_Odd_Even
F1
Polyfuse
F2
U2E
MCP6004
U7E
TL074
VCC_B
GND_B
Phillip Mates
Sheet: /
File: phoretic.sch
Title: Phoretic: arduino-based e-ink eurorack module
Size: A4
Date: 2020-12-09
Rev: rev alpha
KiCad E.D.A. kicad 5.1.8
Id: 1/1